SMITH® JAY R. SMITH MFG. CO.
DIVISION OF SMITH INDUSTRIES, INC.
POST OFFICE BOX 3237
MONTGOMERY, ALABAMA 36109-0237 (USA)
TEL: 334-277-8520 FAX: 334-272-7396 www.jrsmith.com
CUSTOMER DRIVEN

MEMBER OF:

LOCATION

COMPACT FIXTURE SUPPORTS
FOR SIPHON JET WATER CLOSETS WITH VERTICAL CENTER LINE FITTINGS
FLOOR-MOUNT FRAME FOR NO-HUB SYSTEMS

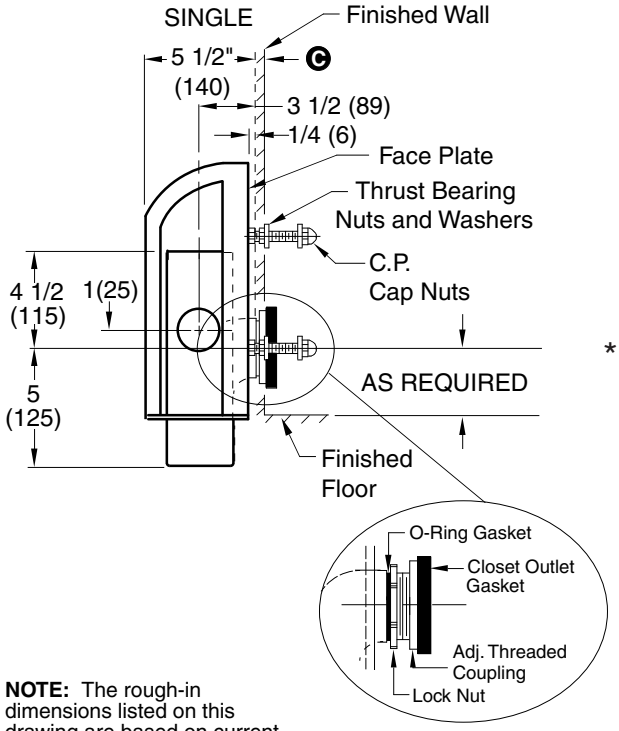

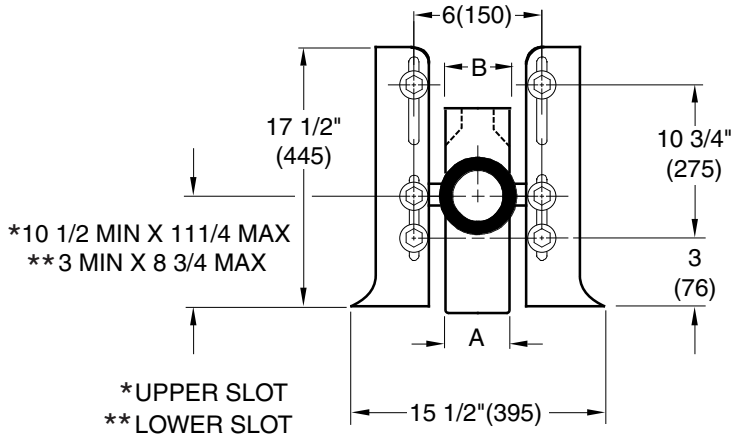

Fig. SQ-0-2358Y-32 . . . . 3"(75) NO-HUB w/2"(50) Vent

NOTE: The rough-in dimensions listed on this drawing are based on current information available to Jay R. Smith by the fixture manufacturers. We recommend that you verify these dimensions with the fixture manufacturer. We will not accept responsibility for rough-in dimension changes by the fixture manufacturer.

A SIZE	B SIZE
3(80)	2(51)
3(80)	3(76)
4(100)	2(51)
4(100)	4(100)

NOTE: Coupling should extend 5/16"(8) beyond finished wall.
NOTE: Longer closet studs and couplings available when required.
C 1"(25) MIN to 1 1/4"(32) MAX regularly furnished. Other dimensions available upon request.

INSTALLATION INSTRUCTIONS

A. Center stack between two studs back 3 1/2".
B. Assemble the face plates temporarily to the fitting, mark the locations of the bolt holes in the slab, and then secure faceplates to the floor.
C. Faceplates are fastened to the adaptor by means of the fixture studs, nuts and washers provided.
D. Thread locknut on male thread of adjustable coupling approximately 1"(25) and push "O"-Ring against locknut.
E. Apply No. 90 Smith Seal to male threads on coupling. Install coupling and adjust it to extend 5/16"(8) beyond finished wall. Thread locknut snugly.
F. Assemble the bearing nuts and washers to the fixture supporting studs. The fixture studs should extend 2 1/4"(57) beyond finished wall.
G. Adjust bearing nuts so that washers extend 1/16"(2) beyond finished wall.
H. After wall is erected, remove any plaster grout touching the fixture studs, bearing nuts washers and coupling.
I. Place gasket in closet recess and set closet on studs protruding from wall making sure that closet outlet is centered on coupling.
J. Place fiber washers on studs. Apply the two bottom and top left cap nuts, tighten securely. Apply the top right cap nut hand tight and snug up 1/4 turn with wrench.

▲ **NOTE:** Back of fitting extends beyond frame 3/4" (19) for 4" (100) sizes. Recommend use with 2 x 8 studs only.

NOTE: Dimensions shown in parentheses are in millimeters.

REV.	DATE	DESCRIPTION	BY	CKD. BY	WEIGHT POUNDS	VOLUME CUBIC FEET	FIGURE NUMBER
							SQ-0-2358Y

DRAWING NUMBER sSQ-0-2358Y
SIZE A
SCALE: NONE
DATE: 6-4-02
APPROVED BY:
CHECKED BY:
DRAWN BY: RN
FIGURE NUMBER SQ-0-2358Y

WE CAN ASSUME NO RESPONSIBILITY FOR USE OF SUPERSEDED OR VOID DATA
DIMENSIONS ARE SUBJECT TO MANUFACTURERS TOLERANCE AND CHANGE WITHOUT NOTICE